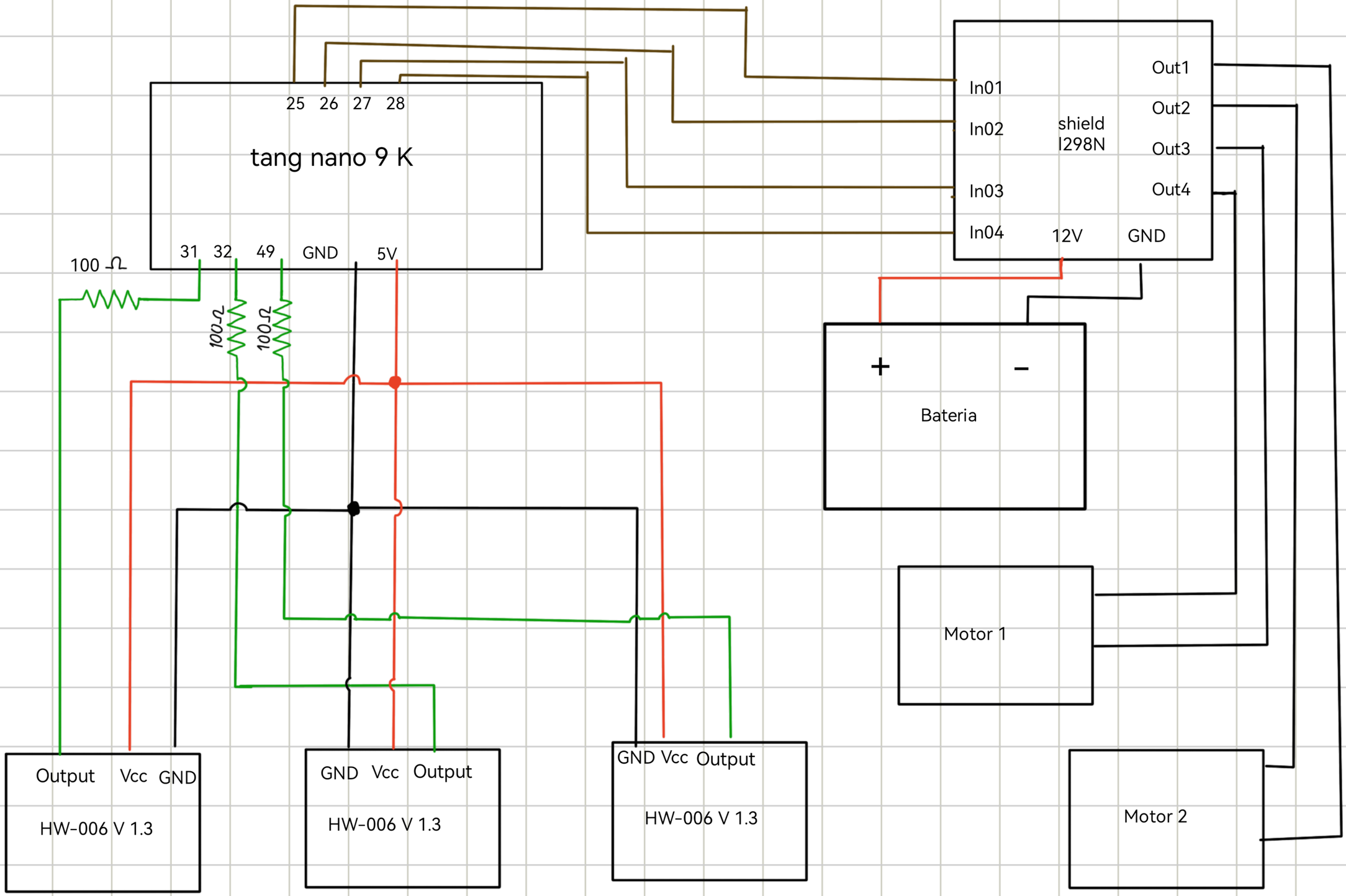
tang nano 9 K
25
26
27
28
31
32
49
GND
5V
100 Ω
100Ω
100Ω
In01
In02
In03
In04
shield
l298N
Out1
Out2
Out3
Out4
12V
GND
+
-
Bateria
Motor 1
Motor 2
Output
Vcc
GND
HW-006 V 1.3
GND
Vcc
Output
HW-006 V 1.3
GND
Vcc
Output
HW-006 V 1.3